HYDRAULIC MOTOR REDUCTION UNIT MG5-S

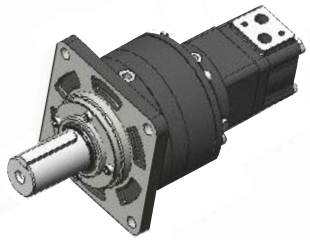

Reduction Ratio 5:1

TYPE		MGF 5-S & MGT 5-S							
SIZE		75	100	125	150	200	250	300	400
DISPLACEMENT per OUTPUT rpm	cm^3	409.0	506.5	631.5	805.0	1006.0	1256.0	1579.5	2002.0
	in^3	24.5	25.0	38.6	49.2	61.5	76.8	96.6	122.5
MAX. OUTPUT SPEED	rpm cont.	162	150	120	90	75	60	48	38
	rpm int.	200	180	144	112	90	72	57	46
MAX. OUTPUT TORQUE	Nm cont.	1200	1525	1875	2450	3050	3600	4125	4325
	lbf.in cont.	10620.0	13496.2	16593.7	21682.5	26992.5	31860.0	36506.2	38276.2
	Nm int.	1550	1950	2450	3000	3600	4350	5000	4950
	lbf.in int.	13717.5	17257.5	21682.5	26550.0	31860.0	38497.5	44250.0	43807.5
MAX. PRESSURE DROP	bar cont.	210	210	210	210	210	200	200	160
	psi cont.	3050	3050	3050	3050	3050	2900	2900	2320
	bar int.	275	275	275	260	250	250	240	190
	psi int.	3990	3990	3990	3770	3630	3630	3480	2760
MAX. OIL FLOW	lpm cont.	66	76	75	75	75	75	75	76
	gpm cont.	14.5	16.7	16.5	16.5	16.5	16.5	16.5	16.7
	lpm int.	82	91	91	91	90	90	90	92
	gpm int.	18.0	20.0	20.0	20.0	19.8	19.8	19.8	20.3

Maximum continuous output torque 6250Nm 55312 lbf.in Without Brake
Maximum continuous output torque 5650Nm 50000 lbf.in With Brake

Spring applied pressure release
Static brake torque 10,000 lbf.in - 1130 Nm
Brake release pressure 450 psi - 31 bar
Maximum brake pressure 300 bar
Motor drain line must be used, back to tank without obstruction.

Maximum inlet pressure 3250 psi - 224 bar
Maximum pressure drop and speed must not be reached simultaneously.
Intermittent operation may occur for 10% max. of every minute.

At speeds lower than 10 rpm please consult our Technical Department.
Mineral based hydraulic fluids with anti-wear additives are recommended with a viscosity of 35 mm^2/s at a temperature of 50°C.
Minimum recommended oil viscosity 13 mm^2/s at operating temperature.
Recommended oil cleanliness ISO 19/14 with a nominal filtration of 25 micron or better.
Where non-flammable fluids are to be used it is advisable to consult our Technical Department.
Ambient temperature should be between -30°C and +90°C.
Normal operating temperature should be between +30°C and +60°C.
Maximum operating temperature +85°C.

SYMBOL c/w MSV

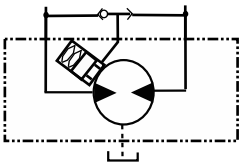

Motor / Brake Precautions

To ensure proper operation of the brake, a separate case drain back to tank must be used due to the possibility of return line pressure spikes. A simple schematic of a system utilizing a motor/ brake is shown in the diagram below.

To achieve proper brake release operation, it is necessary to bleed out any trapped air and fill brake release cavity and hoses before all connections are tightened.
It is advisable that the brake release port should be positioned as near the top of the unit in the installed position.

Caution

All Adan motor / brakes are intended to operate as static parking brakes, the system should be designed to bring the load to a stop before the brake is applied.
With large displacement motors it is possible for the motor to produce higher torques than the brake will hold, it is critical that the maximum system pressure is limited in these applications. It is vital that the system relief be set low enough to ensure the motor is not able to produce more torque than the brake can hold.
Failure to do so may result in serious injury or death.

MGF5-S

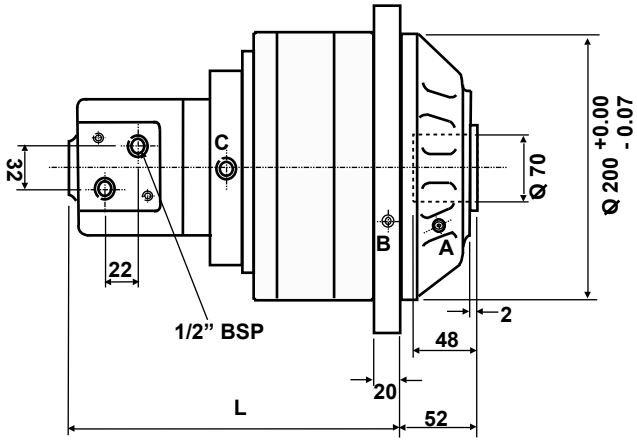

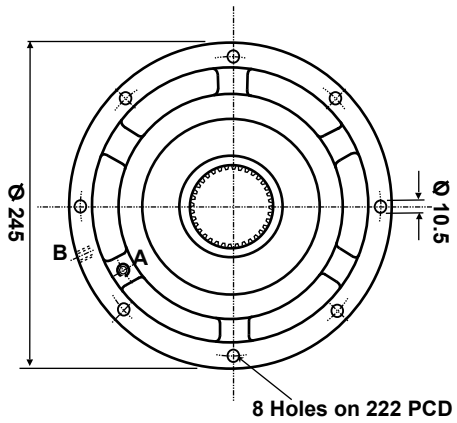

MGF5-S-B

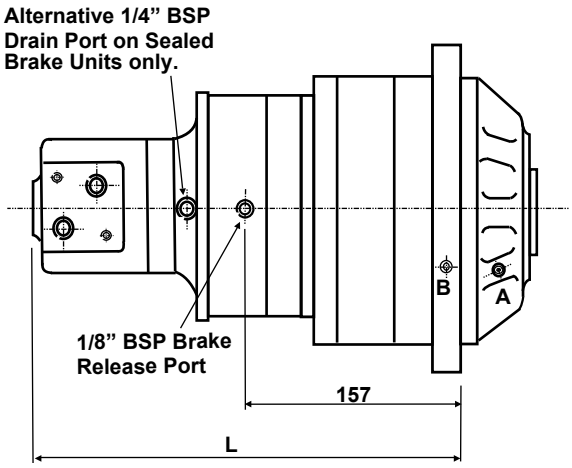

Ports A & B alternative gearbox drain connections 1/8" BSP.
Standard units supplied with one plug & transit plug.
Sealed units one port plugged the other fitted with a breather.
Port C is a motor drain connection only.

Gearbox unit available with multi-disc
Fail safe brake. Static rating 10,000 lbf. In 1100 Nm
Brake Release Pressure 450 psi 31 bar

MGT5-S

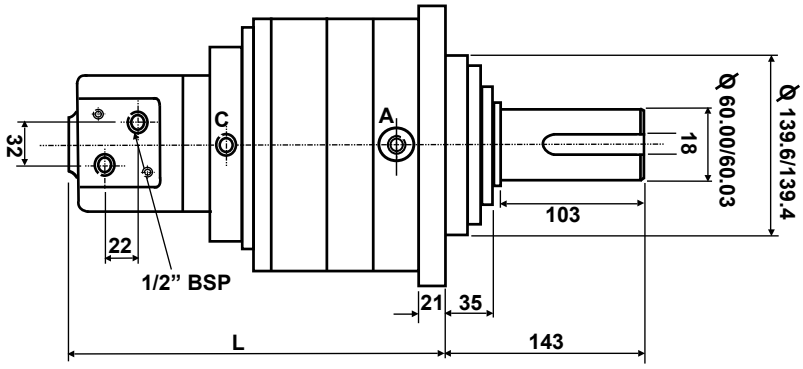

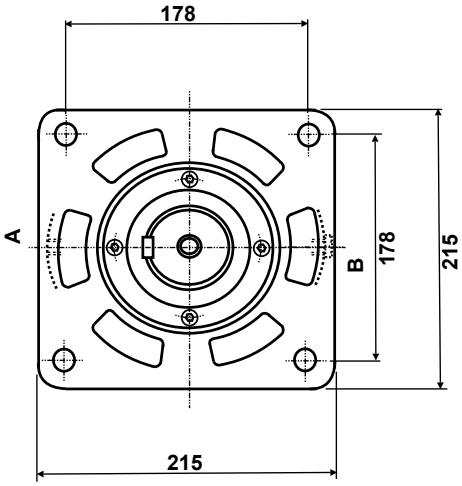

MGT5-S-B

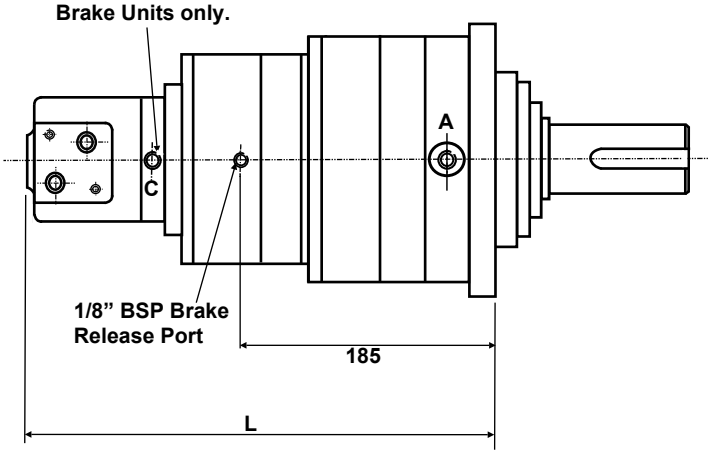

Ports A,B are alternative gearbox drain connections 1/4" BSP.
Port C is a motor drain connection only.
Standard units supplied with two plugs and a transit plug.
Sealed units two ports plugged the other fitted with a breather.

Gearbox unit available with multi-disc
Fail safe brake. Static rating 10,000 lbf. In 1100 Nm
Brake Release Pressure 450 psi 31 bar

DIMENSIONS — MG5-S *SERIES*

	SIZE	75	100	125	150	200	250	300	400
MGF5 L	mm	244.0	248.0	253.0	258.0	265.0	274.0	286.0	301.0
MGF5 WEIGHT	kg	48.5	48.7	49.0	49.4	49.9	50.5	51.2	52.0
MGF5B L	mm	313.5	317.5	322.5	327.5	334.5	343.5	355.5	370.5
MGF5B WEIGHT	kg	264.0	268.0	273.0	278.0	285.0	294.0	306.0	321.0
MGT5 L	mm	273.0	276.0	281.0	286.0	293.0	302.0	314.0	329.0
MGT5 WEIGHT	kg	43.5	43.7	44.0	44.4	44.9	45.5	46.2	47.0
MGT5B L	mm	347.5	350.5	355.0	360.5	367.5	376.5	388.5	403.5
MGT5B WEIGHT	kg	63.5	63.7	64.0	64.4	64.9	65.5	66.2	67.0

SHAFT VARIANTS — MG5-S *SERIES*

MGF5
KEYED SHAFT DETAIL FK

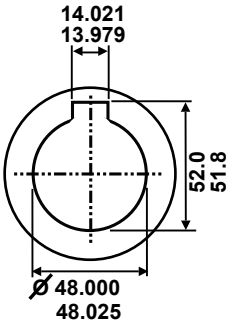

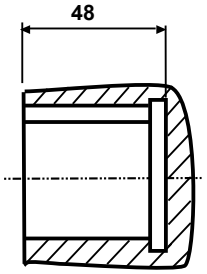

MGF5
SPLINED SHAFT DETAIL FS

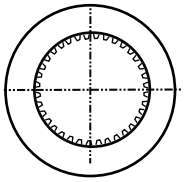

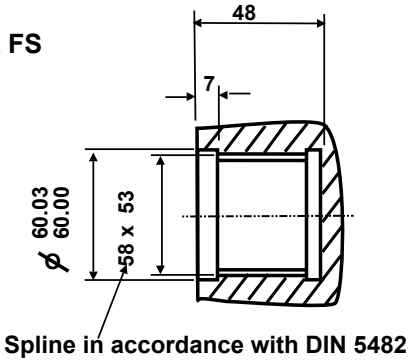

MGT5
MALE SHAFT DETAIL MK

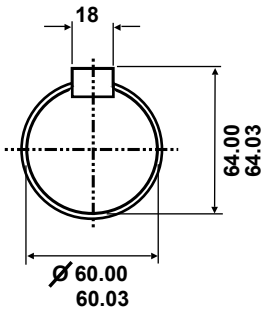

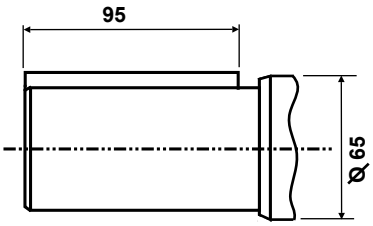

ADAN REDUCTION UNIT — MG5-S *SERIES*

ORDERING CODE

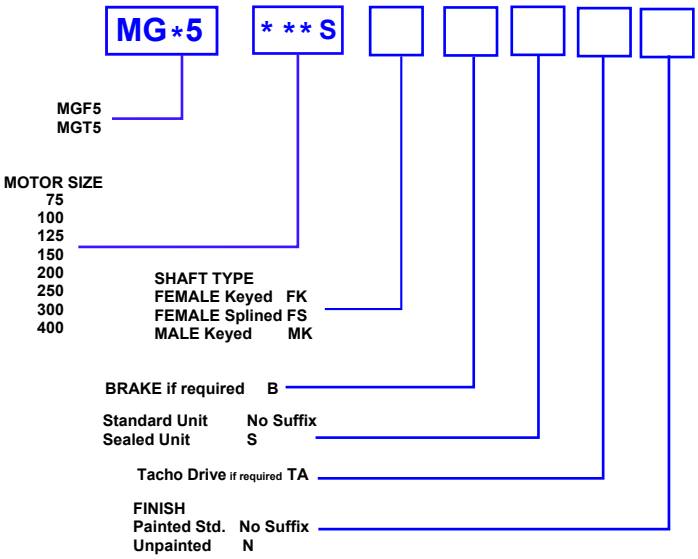

SHAFT ROTATION

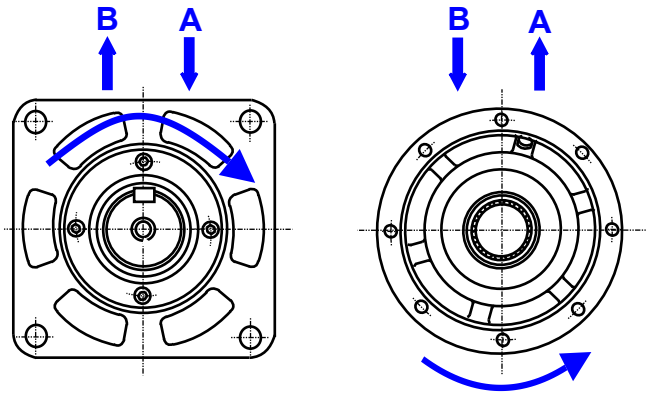

MALE SHAFT LOADINGS

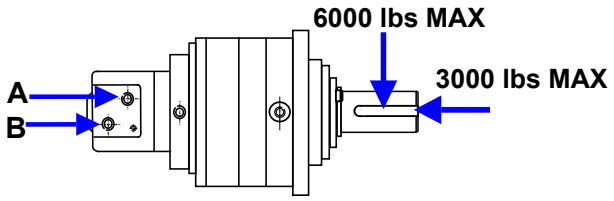

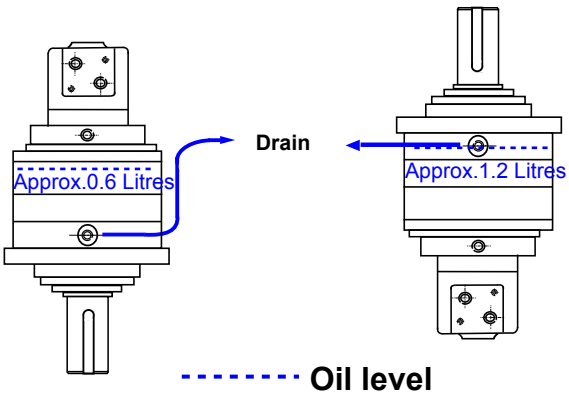

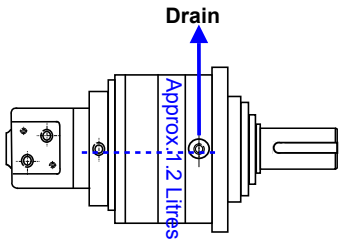

MOUNTING POSITIONS

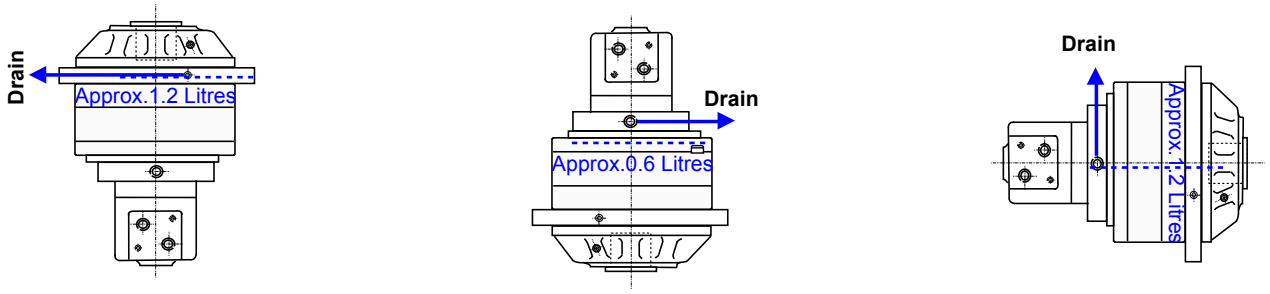

Standard unit must be drained to tank from the highest point as shown.

Sealed units fill with EP oil with anti foaming additives before use.
Select the grade appropriate to temperature from chart based on ISO 3448.
It is recommended to replace the oil after the first 50 hours,then every 1000 hours or 6 months.

Fit breather in highest drain port.

Viscosity	Ambient Temperature °C
ISO VG 150	-10 > +30
ISO VG 220	+10 > +45
ISO VG 320	+30 > +60

HYDRAULIC MOTOR REDUCTION UNIT

MGV25-S

Reduction Ratio 25 :1

TYPE		MGV25-S							
SIZE		75	100	125	150	200	250	300	400
DISPLACEMENT per OUTPUT rpm	cm^3	2045.0	2532.5	3157.5	4025.0	5030.0	6280.0	7897.5	10010.0
	in^3	122.5	125.0	193.0	246.0	307.5	384.0	483.0	612.5
MAX. OUTPUT SPEED	rpm cont.	32.4	30.0	24.0	18.0	15.0	12.0	9.6	7.6
	rpm int.	40.0	36.0	29.0	22.0	18.0	14.5	11.5	9.0
MAX. OUTPUT TORQUE	Nm cont.	6000	7625	9375	9375	9375	9375	9375	9375
	lbf.in cont.	53100.0	67481.0	82875.0	82875.0	82875.0	82875.0	82875.0	82875.0
	Nm int.	7750	9750	11250	11250	11250	11250	11250	11250
	lbf.in int.	68587.5	86287.5	99450.0	99450.0	99450.0	99250.0	99250.0	99250.0
MAX. PRESSURE DROP	bar cont.	210	210	210	170	140	100	80	70
	psi cont.	3050	3050	3050	2465	2030	1450	1160	1015
	bar int.	275	275	250	195	160	125	100	80
	psi int.	3990	3990	3630	2827	2320	1810	1450	1160
MAX. OIL FLOW	lpm cont.	66.0	76.0	75.0	75.0	75.0	75.0	75.0	75.0
	gpm cont.	14.5	16.7	16.5	16.5	16.5	16.5	16.5	16.5
	lpm int.	80.0	90.0	90.0	90.0	90.0	90.0	90.0	90.0
	gpm int.	17.6	19.8	19.8	19.8	19.8	19.8	19.8	19.8

Maximum continuous output torque 9375 Nm 82875 lbf.in

Spring applied pressure release
Static brake torque 10,000 lbf.in - 1130 Nm
Brake release pressure 450 psi - 31 bar
Maximum brake pressure 300 bar
Motor drain line must be used, back to tank without obstruction.

Maximum inlet pressure 3250 psi - 224 bar
Maximum pressure drop and speed must not be reached simultaneously.
Intermittent operation may occur for 10% max. of every minute.

At speeds lower than 10 rpm please consult our Technical Department.
Mineral based hydraulic fluids with anti-wear additives are recommended with a viscosity of 35 mm^2/s at a temperature of 50°C.
Minimum recommended oil viscosity 13 mm^2/s at operating temperature.
Recommended oil cleanliness ISO 19/14 with a nominal filtration of 25 micron or better.
Where non-flammable fluids are to be used it is advisable to consult our Technical Department.
Ambient temperature should be between -30°C and +90°C.
Normal operating temperature should be between +30°C and +60°C.
Maximum operating temperature +85°C.

SYMBOL c/w MSV

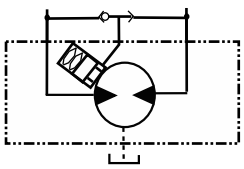

Motor / Brake Precautions

To ensure proper operation of the brake, a separate case drain back to tank must be used due to the possibility of return line pressure spikes. A simple schematic of a system utilizing a motor/ brake is shown in the diagram below.

To achieve proper brake release operation, it is necessary to bleed out any trapped air and fill brake release cavity and hoses before all connections are tightened.
It is advisable that the brake release port should be positioned as near the top of the unit in the installed position.

Caution

All Adan motor / brakes are intended to operate as static parking brakes, the system should be designed to bring the load to a stop before the brake is applied.
With large displacement motors it is possible for the motor to produce higher torques than the brake will hold, it is critical that the maximum system pressure is limited in these applications. It is vital that the system relief be set low enough to ensure the motor is not able to produce more torque than the brake can hold.
Failure to do so may result in serious injury or death.

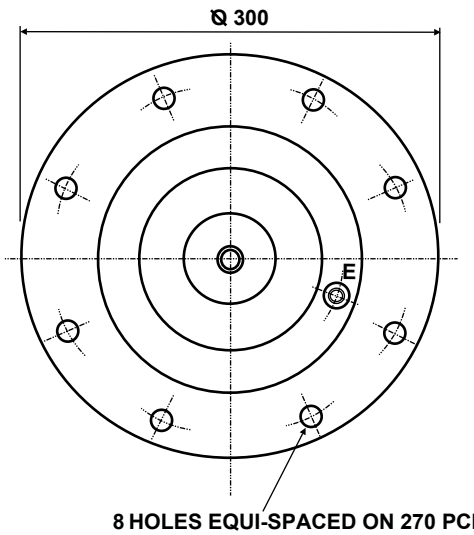

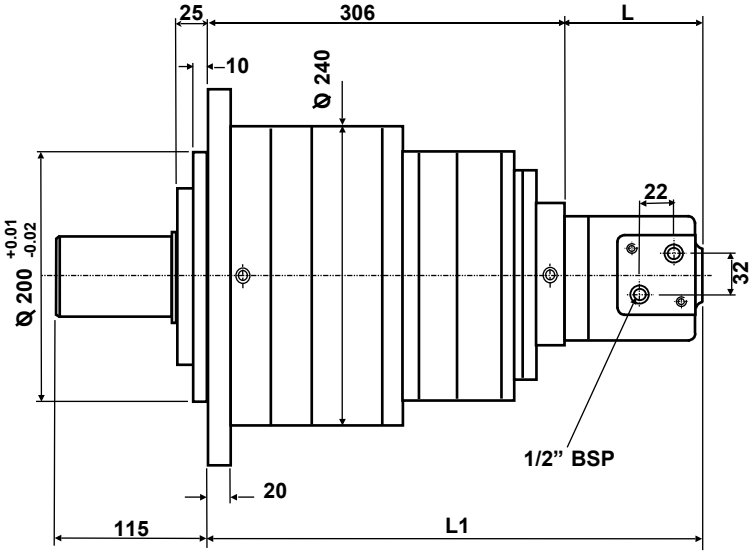

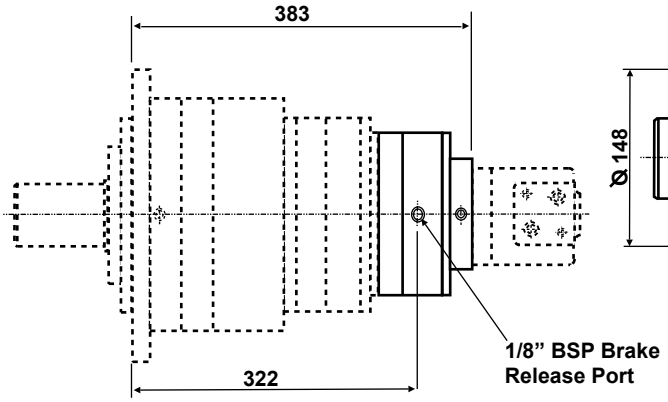

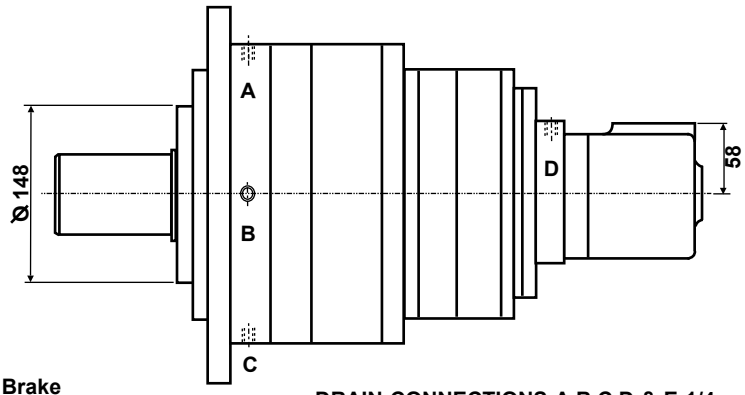

Gearbox unit available with multi-disc
Fail safe brake. Static rating 10,000 lbf. In 1100 NmBrake Release Pressure 450 psi 31 bar

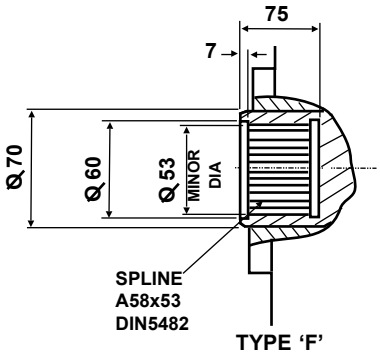

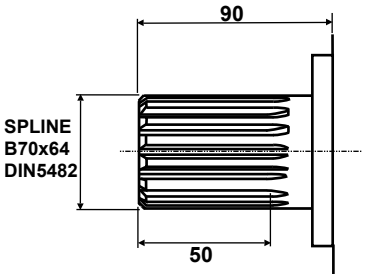

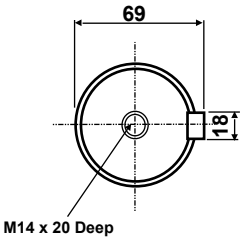

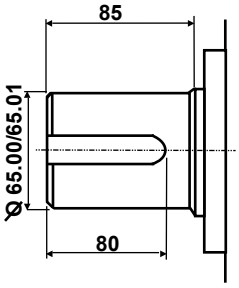

MGV25 SIZE		75S	100S	125S	150S	200S	250S	300S	400S
DIMN. L	mm	85	88	93	99	106	115	126	140
DIMN. L 1	mm	391	394	399	405	412	421	432	446
WEIGHT	Kgs	90.1	90.2	90.6	90.8	91.2	91.8	92.7	93.5

ADAN REDUCTION UNIT — *TYPE MGV25-S*

ORDERING

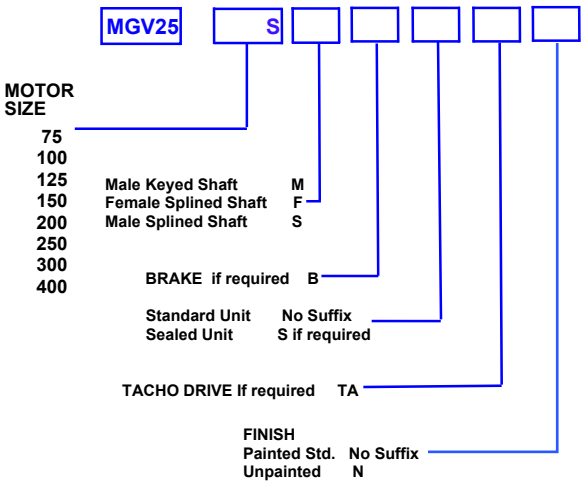

SHAFT ROTATION

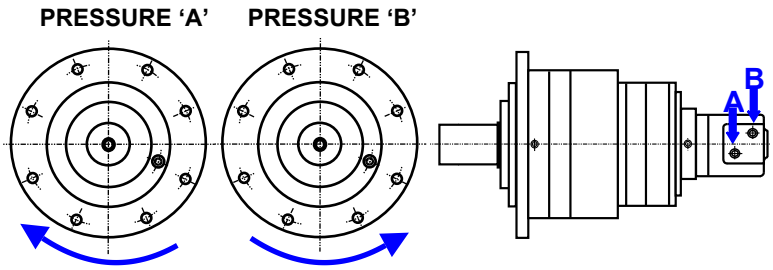

MOUNTING POSITIONS

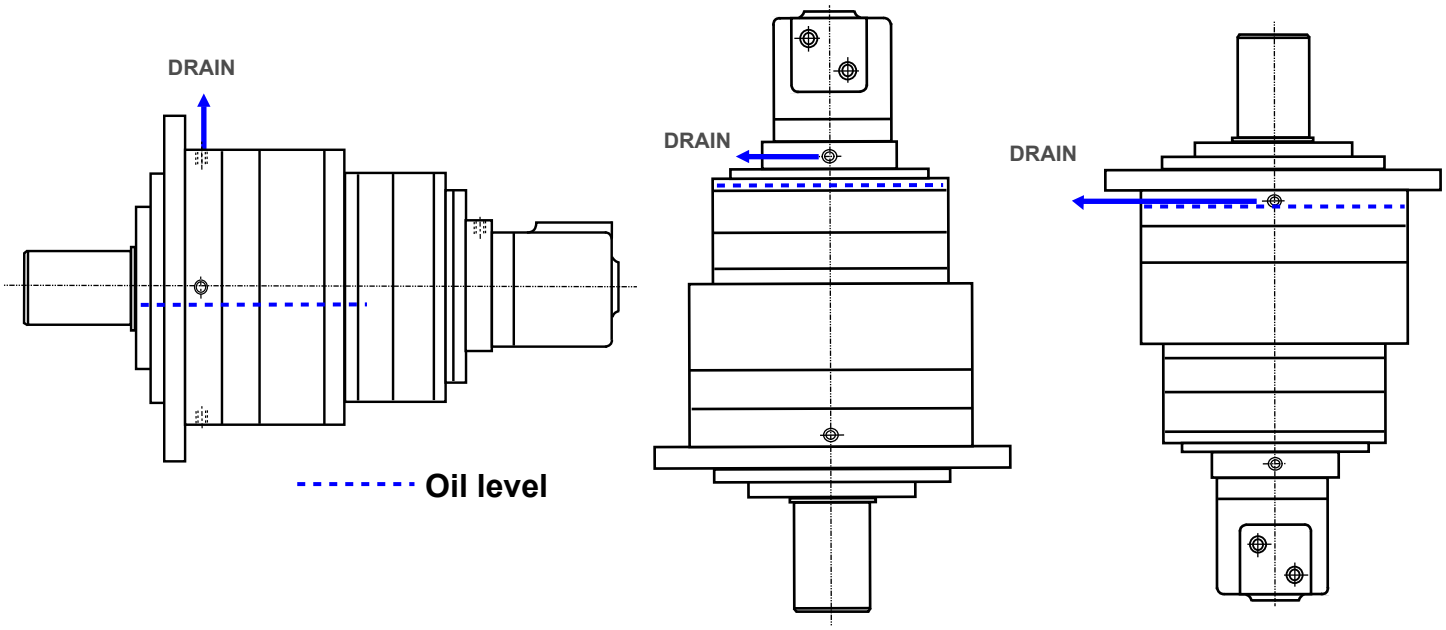

All unsealed brake units must be piped direct to tank without restriction from the highest point.

Sealed units fill with EP oil with anti foaming additives before use.
Select the grade appropriate to temperature from chart based on ISO 3448.
It is recommended to replace the oil after the first 50 hours,then every 1000 hours or 6 months.

Fit breather in highest drain port.

Viscosity	Ambient Temperature °C
ISO VG 150	-10 > +30
ISO VG 220	+10 > +45
ISO VG 320	+30 > +60